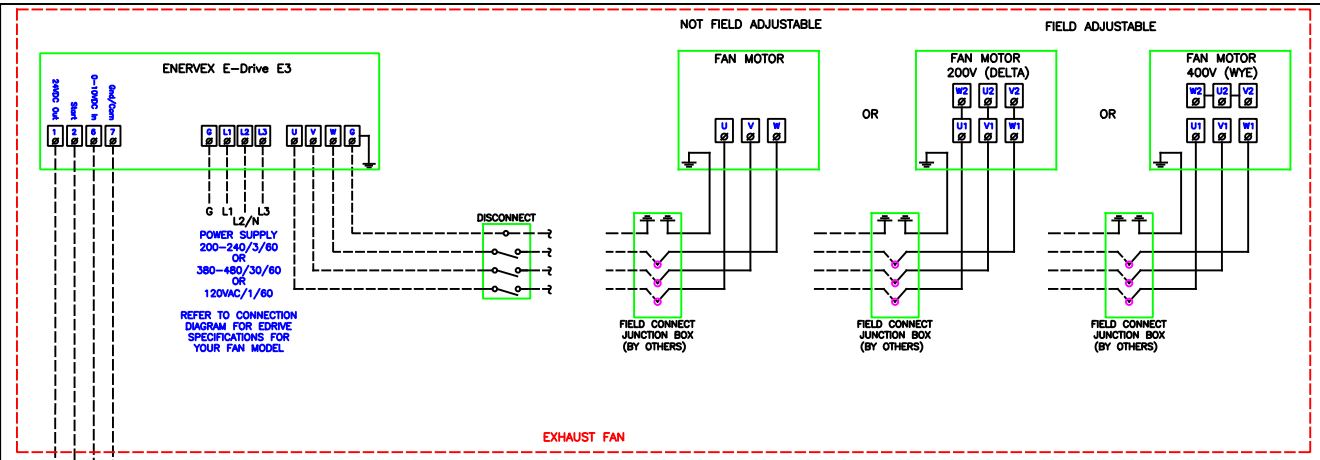

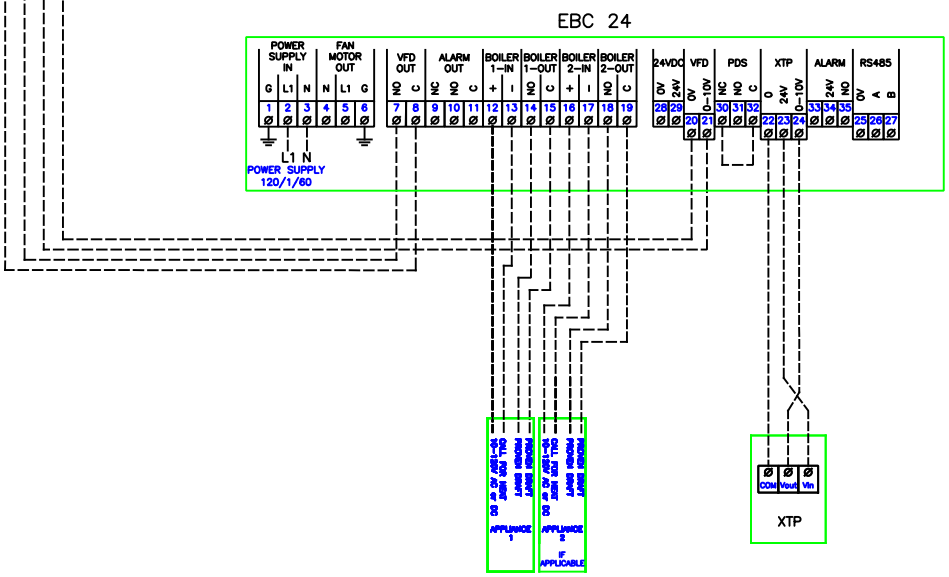

IMPORTANT: VERIFY ALL FAN MOTOR WIRING MATCHES OUTPUT VOLTAGE FROM EDRIVE (REFER TO THE CONNECTION DIAGRAM) POWER TO THE FAN MUST BE PROVIDED BY THE EDRIVE. MOTOR COULD BE DAMAGED IF LINE VOLTAGE IS APPLIED TO THE FAN DIRECTLY.

Note:

The wire sizes shown are typical and may not apply to all jobs. This system must be installed in compliance with the NFPA 70 National Electric Code and/or any local codes.

Not Connected — Connected

Factory Wired — Field Wired

PROPRIETARY AND CONFIDENTIAL

The information contained in this drawing is the sole property of ENERVEX, Inc. Any reproduction in part or as a whole with out the express written consent of ENERVEX, Inc. is prohibited.

NOT TO SCALE

ENERVEX®
GREEN BEFORE GREEN WAS IN
1685 Bluegrass Lakes Pkwy
Alpharetta, GA 30004
(770)587-3238
Fax (770)587-4731

TITLE: WIRING DIAGRAM			DATE: 2/2/2024
NAME: EXHAUST ONLY - EBC 24 & TDF			JOB #: GENERIC
DWG BY: AS	SHEET: 2 OF 2		REV: # 1